Agostino Di Scipio

AUDIBLE ECOSYSTEMICS

n.3a / Background Noise Study
n.3b / Background Noise Study, with Mouth Performer(s)

2004-05

commission Berliner Künstlerprogramme des DAAD

This document consists in two main parts:

1) instructions for the performance of **Audible Ecosystemics n.3a (Background Noise Study)**.
2) instructions and graphical score for the performance of **Audible Ecosystemics n.3a (Background Noise Study, with Mouth Performer)**.

The two works may be presented either separately or together.

Research and experimentation behind this work pursued with the composer's own equipment, Waldstrasse Studio II, Berlin, November and December 2004.
More advanced stages in the compositon carried out at the Elektronisches Studio, Technische Universitat, Berlin, January and February 2005.
This document released 07.02.2005.
discipio@tin.it

07.02.2005

Background Noise Study

live electronics solo

Premise

This work leans on background noise as its only source of sound. It consists in the implementation of a real-time process capable of regulating itself dynamically, using the room sound as the only source for control and dynamical behaviour.

The following Instructions are addressed to the person, or people, in charge of the performance (hereafter called 'electronic performer'). As precise and prescriptive as they can be, these instructions actually leave many technical details aside, thus leaving them to the performer's interpretation.

A short Description of the System Process is also found, which represents an integral part of the Instructions and also provides a qualitative illustration of the performance process.

INSTRUCTIONS

1. Essential Technical Set-up

- two microphones
- a real-time DSP (digital signal processing) unit
- mixer and loudspeakers (6 or 8, plus 1 or 2 subwoofers)

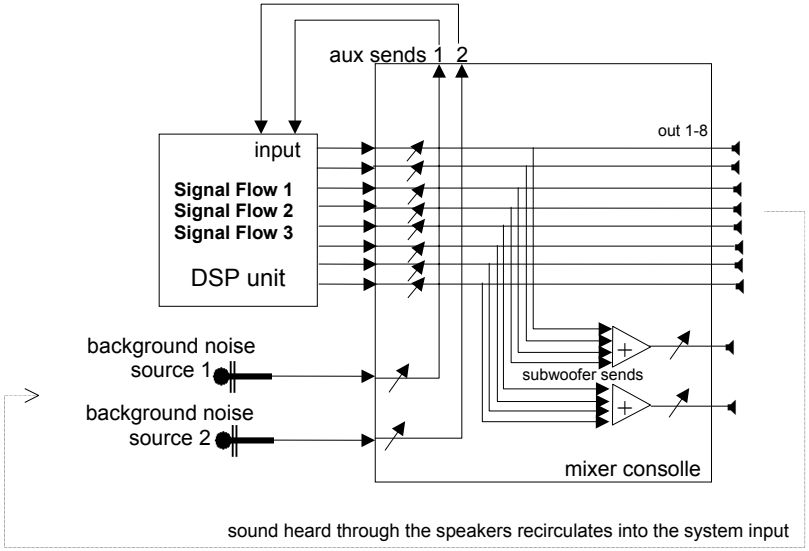

2. Microphones

In the room, hall, or court where the performance will take place, locate a source of background noise, and place microphone 1 close to it. Microphone 2 should be placed either close to a second source of background noise, or in some place where small noisy events are likely to occur during the performance (windows, doors, the listeners' seats, etc.). It may also be standing right in the middle of the room.

The microphone signal should not be routed to the loudspeakers directly, but to the DSP unit only. Within the DSP unit, the microphone signal is subjected to a delay of 20 seconds, so it will only be heard in the loudspeakers after that time.

The microphone gain level must be boosted enough such that the room background noise is distinctly audible over the loudspeakers, especially at the very beginning of the performance.

The two microphones should be placed not too far from the loudspeakers themselves, as they are supposed not only to capture background noise, but also to feed the electronic sound back into the DSP unit.

3. DSP unit
All details concerning the DSP methods implemented for this work are graphically illustrated as signal flow charts:

Signal Flow 1 describes the network of control signals generated live on the sole basis of the input sound.
Signal Flow 2 describes the audio processing for sonic tranformations of the input sound, resulting in new sound material.
Signal Flow 3 describes the routing of the output sound to the loudspeakers.

The output of **Signal Flow 1** consists in several control signals, whose names are printed in bold characters (e.g. **InAmp1**, **Switch**, etc.). These signals drive a number of run-time variables in the **Signal Flow 2**, thus exerting controls over the audio processing of the input sound.

Because the room background noise cannot be isolated from the sound generated by the DSP unit and coming from the loudspeakers, all audio materials recirculate into the input of both **Signal Flow 1** and **Signal Flow 2**.

In the signal flow notation, the following graphical conventions apply:

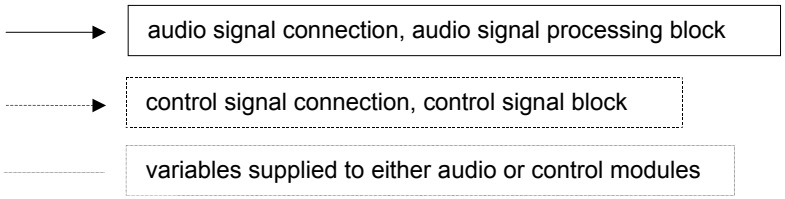

4. Loudspeakers
Use 6 or 8 loudspeakers. If practical circumstances allow, they should be placed around the audience not far from the walls, and should be turned backwards, facing the walls, not the audience. The aim is, to let the audience hear more the reflected room sound, and less the direct loudspeaker sound.

Be aware that turning the loudspeakers towards the walls will inevitably result in a weakened sound and in an inusual spectral coloration, hence may require some extra adjustments on the mixer (relative to the total output level and in equalization of the output sound).

Background Noise Study: SIGNAL FLOW 1 (network of live-generated control signals)

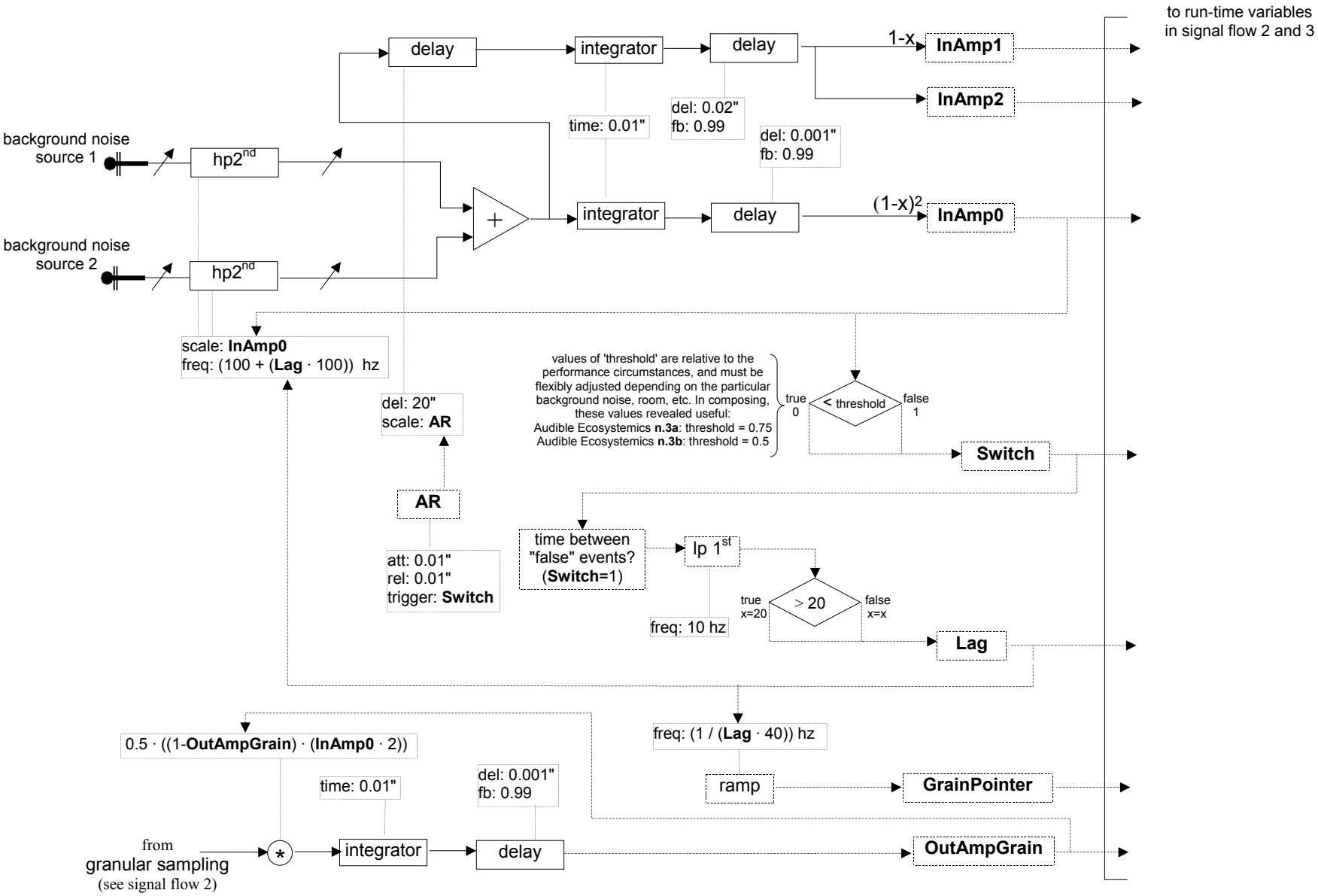

Background Noise Study: SIGNAL FLOW 2 (audio signals)

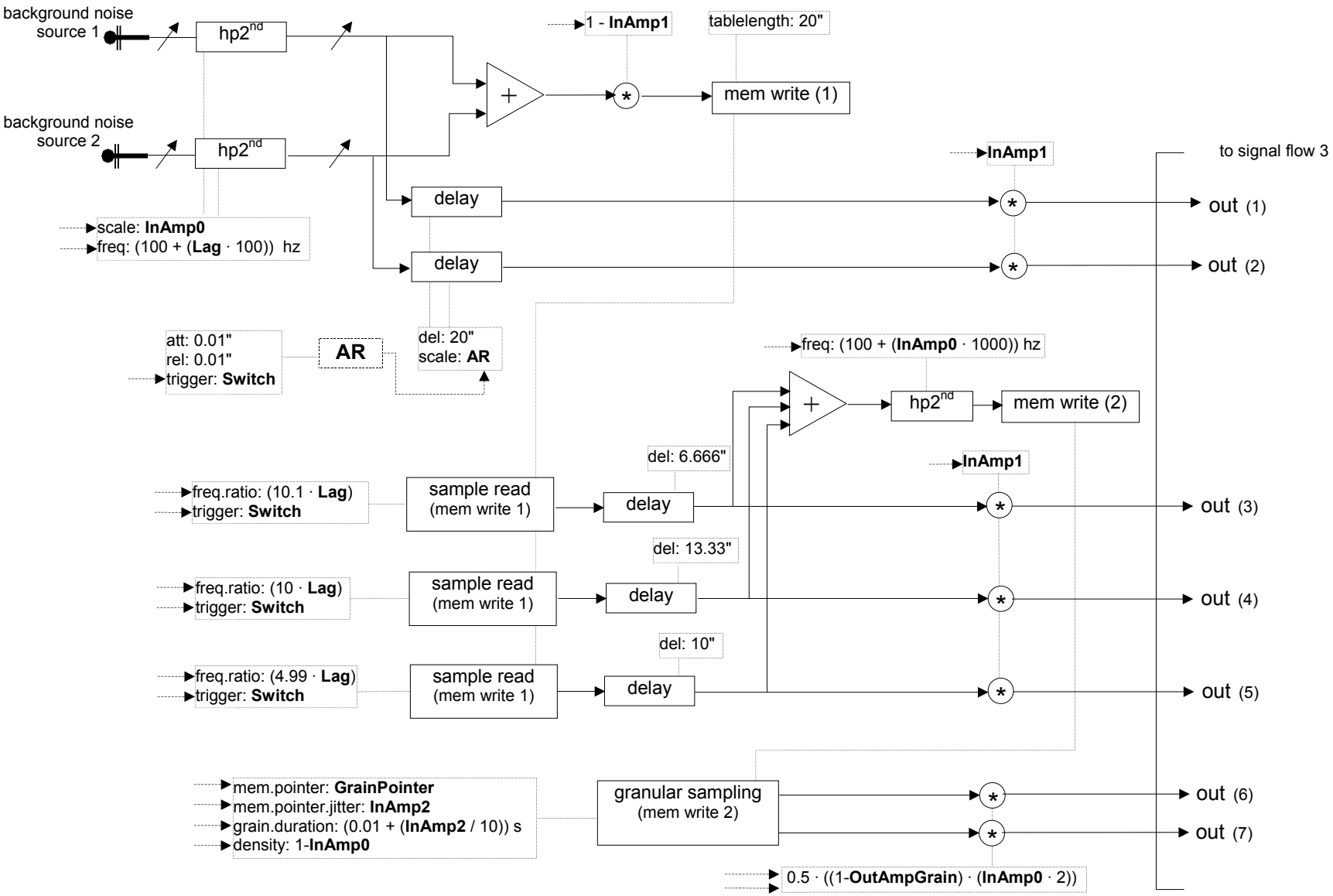

Background Noise Study: SIGNAL FLOW 3 (speaker assignments)

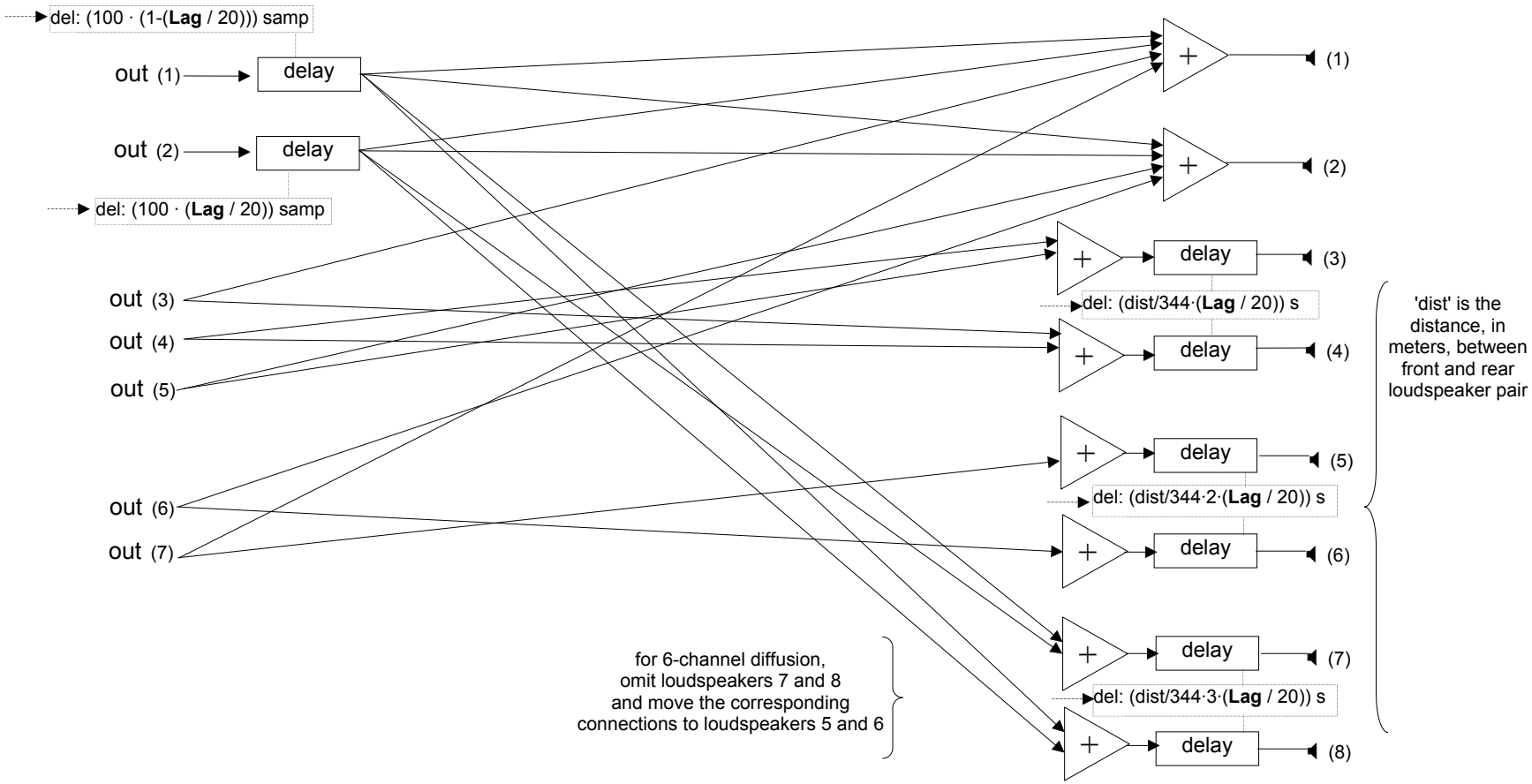

5. Description of the System Process

Preparing a performance of this work is the same as building a system having its own dynamical behaviour. Here 'system' is not just the computer DSP unit, but the overall network of nonlinear connections among the room and the technical equipment. In the real-time performance (concert, or other), the system internal state will change according to external circumstances (input background noise, total room sound).

Performance begins by starting the DSP unit. There is first a silence of 20 seconds, then the source background noise is heard in the loudspeakers and starts recirculating in the 20-second feedback line.[1] When the level of tiny random events in the room exceeds a given threshold, or the sound in the feedback loop accumulates to finally exceed that threshold, audible changes in spectrum coloration and space orientation of the delayed sound take place in the DSP unit.

At all time the input sound is cyclically recorded into a 20-second memory buffer, but only when the threshold is exceeded, the DSP unit starts reading samples off the memory buffer, producing (rather heavy) transformations of the input. When the threshold is repeatedly or permanently exceeded, the DSP output grows louder and denser, and the delayed input sound is automatically shut down, thus discontinuing the feedback loop, too.

Sooner or later, the sonic transformations will build up to point of saturation.[2] When that happens, the process shuts itself down, and automatically restarts within the next 20 seconds (the room background noise is heard again in the loudspeaker and the feedback loop reactivates). With each new start a different behaviour is likely to emerge, due to (1) slight modifications meanwhile incurred in the background noise source, (2) slight modifications meanwhile incurred in room response, (3) waste sound material left behind in the previous run (waste are heard in the otherwise silent 20 seconds before next start).

The full performance consists in several runs of the above process. The number of runs is free, but the total performance duration must be limited to 6-10 minutes. To end the performance, just discontinue the connection between microphones and DSP unit. You decide whether the end should consist in 20 seconds of amplified background noise (similar to the beginning), or in the system self-commanded discontinuation (after the last electronic drift).

6. Criteria for (auditorily) evaluating the system dynamics

The DSP output sound consists in textural or gestural transformations of the input material. The result may be rich in clicky artifacts, interferences and other transient phenomena. In case the process reveals relatively idle, the 20-second feedback loop will let some frequencies in the room become stronger than others, and if they happen to enter the DSP transformations, they will add pitch variations and glissando gestures to the output sonority.

A good performance is when the generated sound material is as diverse and varied as possible, mirroring the variety of system states. This is likely to occur when there is a good balance between the system input and output, and is heard as the appearence of tiny electronic transformations of the input noise that yet do not seem to build up, feeding the chain of causes and effects but not causing the overall process go adrift. The main task ofo the electronic performer consists, then, in getting the system to reach this dynamical, unstable balance, and in retarding its decay or degradation.

Looking for this balance is what 'rehearsals' are for (the time when you really 'perform' this work). In the concert presentation, you may still handle or bias the system in its process, but only if things do not seem to proceed as roughly expected. Every action you take in the attempt at getting things work better has systemic consequences, often not easy to anticipate, because of course the attempt itself slightly alters the system dynamics.

---

[2] The background noise played back from the loudspeakers should be clearly recognizable as such. Though the actual power level may be really weak, listeners should easily perceive that it is an enormously amplified sound. The 'amplification' as such should be heard.

[3] 'Saturation' may not imply signal clipping or distortion, but just that the total sound in the room completely hides or masks the amplified background noise.

- 07.02.05 -

Background Noise Study, with Mouth Performer(s)

live electronics and mouth performer(s)

an Natalia Pschenitschnikova

Premise

This work leans mainly on the sound environment internal to the vocal tract and the mouth, including several tiny noise artifacts we all produce inadvertantly, caused by involuntary muscular activities and other physiological circumstances.

While professional singers and vocalists are trained to carefully avoid these small artifacts and defects in their voice, this work invites them to reconsider and creatively explore such otherwise wasted sounds. Committed non-professionals performers can also approach the performance of this work, developing a better awareness and more acute sonic and bodily perception of their own vocal tract.

Personnel

1) person (or people) in charge of the electronics (hereafter called 'electronic performer')
2) one performer (or more performers) using a very small microphone, handling it either inside the mouth or just before the lips

In the next pages you find a Graphical Score and the Instructions. They are addressed to the 'mouth performer', but the electronic performer should also be perfectly aware of them, especially in that they refer to the interaction with the electronics.

Be aware that the Graphical Score in itself doesn't provide all the information to properly approach this work, therefore it is crucial that you read carefully through the Instructions section.

Electronics

The technical set-up and the live electronics details are exactly the same as in the live electronics solo **Background Noise Study**. The only difference is, here one only microphone is used, not two. Also, some minor changes in the DSP transformations may be in order, due to the different sound environment explored here. However, these changes and adjustments are left to the electronic performer's interpretation.

Background Noise Study, with Mouth Performer(s)

graphical score

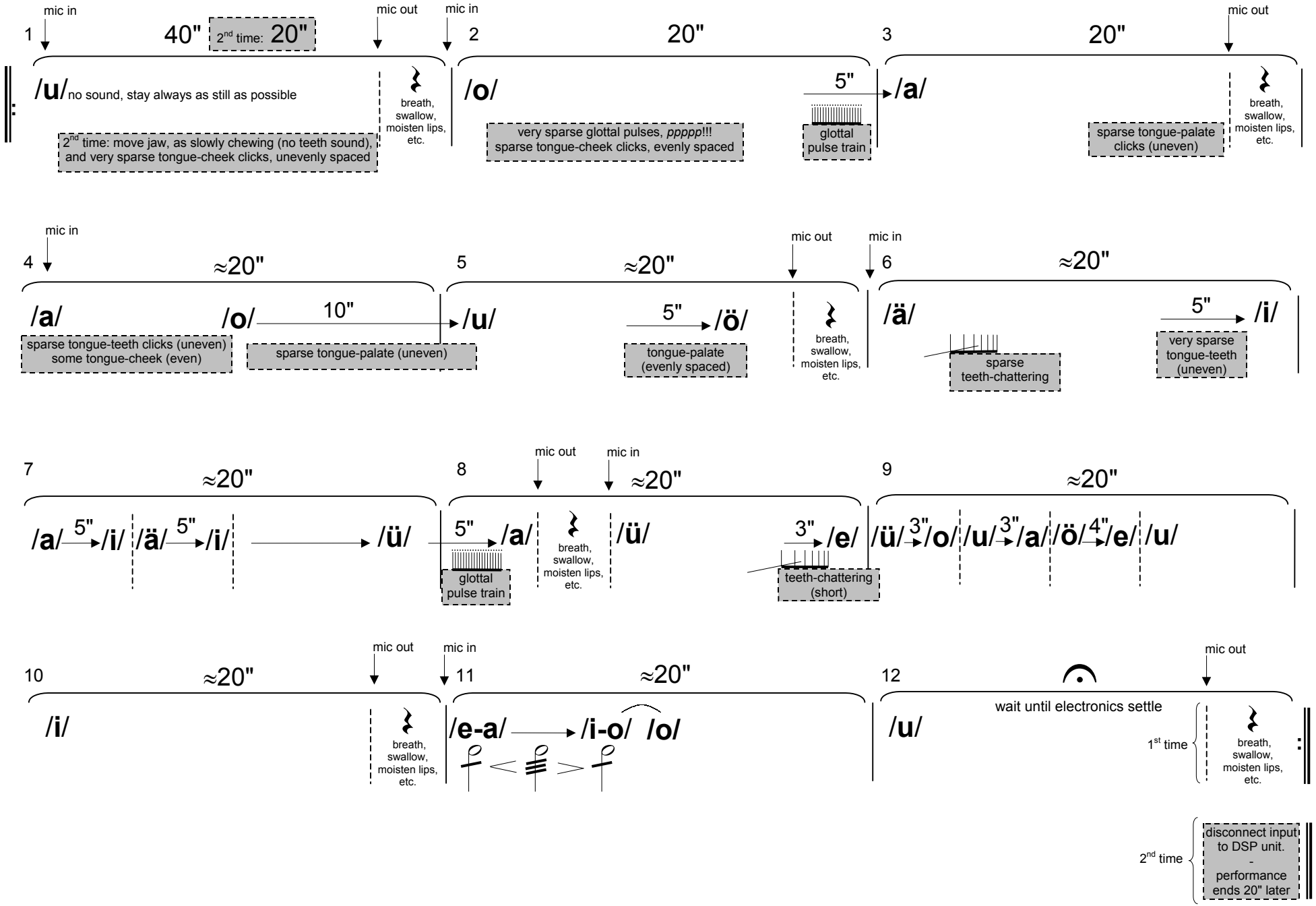

INSTRUCTIONS for the mouth performer

The score must be read through twice, as indicated by "ritornello" marks at beginning and end. Annotations in grey shaded boxes only apply in the second read.

Bar durations are indicated in seconds. Duration of bars 1-3 must be matched as precisely as possible, the remaining durations may be approximate. Within bars, event durations are roughly proportional to bar duration.

1. Microphone
'Mic in' = you take the microphone in the mouth.
'Mic out' = you take the microphone out, but keep it very close before the lips.

You handle the microphone gently but firmly, with two fingers. Avoid audible contacts of fingers with the microphone membrane itself. Always avoid contact of the microphone with mouth parts (teeth, tongue, cheeks, etc.). More detail as to the microphone is found later, for specific instructions.

> Note: *using the microphone, you do not only capture sounds of the vocal tract that the live electronics will then transform, but you also determine, to some extent, the particular way itself in which the electronics will proceed in manipulating and transforming those sounds.*
>
> Note: *as soft as it can be, the amplified and electronically manipulated sound may become loud enough, during the performance, making your auditory self-perception impossible. There, you can still lean on muscular, physiological self-perception.*

2. Inside Mouth
When keeping the microphone inside the mouth, you refrain from deliberately producing any vocal utterance, neither voiced or unvoiced. Involuntary muscular movements, and their resonance in the cavities of the vocal tract, provide enough sound material. Exceptions to this fundamental rule are described later.

You also refrain from breathing (the airflow would impact directly onto the microphone), or only breath with the nose and very slowly, but never through the mouth. (You can easily block the aperture between mouth and pharynx, and let the air pass through the nasal pharynx only. This may seem unnatural, but actually we all do that often, and in a very natural way).

You remain as still as possible at all times, keeping the vocal tract in postures denotated by phonetic symbols: /**a**/ /**ä**/ /**e**/ /**i**/ /**ö**/ /**o**/ /**ü**/ and /**u**/. The mouth and facial muscles be as relaxed and mellow as possible, they need not be tensed.

When a new phonetic symbol is encountered, you change posture as quickly and silently as possible (e.g. bar 4, changing from /**a**/ to /**o**/). When an arrow is encountered connecting to the next phonetic symbol, you change posture gradually (e.g. end of bar 2, a 5-second transition from /**o**/ to /**a**/).Changing posture of vocal tract may require changes in microphone position inside the mouth, such that the microphone comfortably fits the particular posture.

3. Outside Mouth
When musical rests occur (e.g. end of bar 1), you pull the microphone out of the mouth and keep it just before the lips. You swallow, moisten the lips, stretch and contract the tongue muscles, and do all sorts of small things that are physiologically natural every now and then. Make sure the microphone don't miss these sounds. You may also breath normally, with either mouth or nose (or both). Let the microphone capture the breath-in sound only, avoid breathing-out right into it.

Rest durations must be 5 seconds or shorter.

Note: *these 'rests' are physiological, muscular rests, not musical silences. Indeed, they are an exception to the fundamental rule of* not *producing any sound, because here you deliberately produce tiny sounds of a kind normally you would produce only inadvertantly. Refrain from unusually reinforcing them, unless you feel the electronics is so idle that it needs be fed something.*

You may take an extra rest (i.e. not present in the score) whenever you need to relax the muscles, swallow, breath normally, etc. In which case, you shortly leave the score, do what you need, and then continue from the point you left. Extra rests should be as short as possible.

4. Additional Material (second read through the score, only)
During the second read through score, everything remains pretty much the same, except that some additional activities are required, described in verbal annotations (grey-shaded boxes). These are sound-producing activities, and as such they are another exception to the prescriptive rule of *not* emitting sounds:

- **moving the jaw** (like in slowly chewing, but avoid impact between upper and lower teeth, keeping only the sound of the jaw-bone)

- **glottal pulses** (separate glottis strokes, delivered either singularly or in rapid, but short sequences, called '**glottal pulse trains**' in the score)

- **tongue-teeth** pulses (first you silently introduce the tongue-tip in between upper and lower teeth, then you pull back the tongue suddenly, as in the utterance of the English phoneme /**th**/ in the word *though*).

- **teeth-chattering**

- **tongue-palate** clicks (first you lean silently the tongue-tip against the upper palate, then you release it gently. It is suggested that the tongue be kept against the so-called 'soft palate', i.e. rearmost part of the upper palate).

- **tongue-cheeks** (the tongue-tip moves across the mouth, alternately touching the internal surface of two cheeks').

You may replace any of these with others that better fit your mouth physiology, however please only choose actions normally regarded as musically irrelevant, producing only the most minute, tiny sonic events.

Some of these activities are comfortably pursued while keeping the vocal postures required. Others cannot. In the latter case you leave the current posture, make these little sounds, and take the posture up again as soon as possible.

All of these actions result in very feeble sounds (listeners will hear them only through amplification). However, some may result loud and even distorted, because the microphone is so close. That is certainly the case with glottal pulses properly delivered, and may be the case with exaggerated tongue-palate clicks and teeth sounds. In such cases, you temporarily keep the microphone just between the lips or even outside before the lipts, rather than deep in the mouth.

Note: *all additional materials should be delivered prudently, and not too often. Their purpose is not so much to enrich the sound palette, but to slightly alter the balance between the internal sonic environment (mouth, vocal tract) and the external (electronically produced sounds). Eventually, you may happen to break the balance, with improperly controlled sound-producing movements. Then the sonic process may grow dramatically, slip out of hand and go adrift. This risk is crucial to the concept of this work. How to cope with it, is illustrated in the next two sections.*

5. Interaction with Electronics
Every tiny sound you cause or make inside or outside the mouth is amplified and heard through the loudspeakers 20 seconds later. Sound events slightly louder than average are not only amplified but also electronically transformed (mostly by heavy transformations making the vocal origin impossible to recognize). The electronic sound transformations are heard in the loudspeakers together with the amplified and delayed mouth sounds. They themselves are captured by the mouth microphone, whence they re-circulate in the overall process. A 20-second feedback loop is thus created. Within the loop, the particular microphone position, and the posture held at any time, determine the feedback scaling factor and act as a dynamical formant filter internal to the loop.

You may not be immediately aware of what the consequences are of your own (voluntary or involuntary) muscular activities, but within 20 seconds you hear the sounds they produce, and upon hearing them you may eventually change your behaviour, thus affecting the beviour of the electronics too, and the whole process of causes and effects. The following rules apply:

- if you feel the electronics is producing something interesting that you want to prolong, you suspend the score timing and remain as still as possible, keeping the current vocal posture. When the interesting material or situation seems to be vanishing or to deteriorate, you resume score timing and move further.

- If you feel the electronics is idle and just plays back the mouth environment without modifications, you loosen a bit your control, and facilitate the appearence of involutary sounds (you can either slightly change vocal posture, or move the tongue, etc), but always very prudently and delivering the feeblest sounds.

Typically, you have two general strategies in order to somehow orient the electronic process: you may (1) lean on perception of the effects of actions voluntarily or involutarily made, facing their consequences and somehow adapting your current behaviour to cope with them; or you may (2) exert as much control as possible over the causes (i.e. your own actions, including those inadvertantly made), trying to at least roughly foresee (forehear) their consequences.

6. Emergency Situations and Security Measures
In those circumstances when events louder than average become frequent in your mouth (= you are loosing control over the muscles), the texture of electronic transformations may eventually grow, if not in terms of actual loudness, at least in terms of thickness of material, and saturation of musically relevant information. The overall process becomes incontrollable, and goes adrift. There you face an emergency situation.

Emergency situations may occur once or twice during the first half of the performance (first read of the 12 bars). They are quite likely to occur at least twice in the second half, especially if the additional material (described in section 4) is improperly handles or too frequently delivered.

In an emergency, you resort to security measures and exert some degree of violence in order to hush or 'kill' the accumulation of sound material and finally restore a better balance in the process, representing more acceptable conditions for the performance to continue. To that aim, you temporarily leave the score, and try one or more of the following actions:

- bring the microphone deep into the mouth, with the posture of a narrow /**u**/, and stay still
- shelter the microphone in some hollow part of the body (e.g. armpit, or canal of the ear), or create for it a shell with your hands, and stay still

- breath-in and -out, keeping the microphone inside the mouth (that is always forbidden, in any other circumstance)
- produce whistles and hisses, by pulling the air in through the upper teeth kept against the lower lip, or other similar action

- bring the microphone behind the head, closer to the nape.

You may take several of the above actions until the electronic sound settles, but each kind of action must be exerted only once, and for no longer than 20 seconds. When you feel the emergency is over (the electronic sound dissolves, and the mouth environment is again heard through the loudspeakers), get back to the score and continue from the very point where you had left.

> Note: *with the first two security measures (vowel /**u**/, shelter in hollow part) a strong resonator is created surrouding the microphone, which supports the drift of the electronic sound until it gets to a point of saturation sooner than it would have done by itself, and when saturation is reached, the process automatically stops. With the third and fourth (breathing into microphone, producing whistles), you essentially 'talk louder' then the electronics, and that forces the electronics to recede soon. With the last option (hide microphone behind nape), you simply avoid taking action and, for at least 20 seconds, proclaim yourself neutral to events.*

Be aware that, depending on how sudden or gradual, abrupt or gentle, are actions taken facing an emergency, the balance that gets restored may reveal either only temporary or more permanent.

7. Polyphonic performance
When multiple mouth performers are involved, they all start in perfect synch but then proceed independent of one another.

The electronic performer (person in charge of the electronics) must find a good balance among (the mouth sounds of) the performers, none of which should supply to the electronics more sound materials than others, nor should affect the electronic transformations deeper than others.

The electronic performer must also find a good balance between the mouth performers as a group and the electronics. That could be extremely intricate to handle with three or more performers.

It is up to the electronic performer to make decisions concerning emergency situtations (described in section 6), commanding the mouth performers when to resort to security measures and what particular action(s) should be taken.

The electronic performer must be credited for 'conducting' the vocal ensemble, too.